THIS COPY IS PROVIDED ON A RESTRICTED BASIS AND IS NOT TO BE USED IN ANY WAY DETRIMENTAL TO THE INTERESTS OF PANDUIT CORP.

PANDUIT PART NO.	FLANGE THICKNESS	WEIGHT lbs (g) 10 pcs
JP4ZP-____	0.0625 (1.58) - 0.25 (6.35)	5.39 (2444.1)

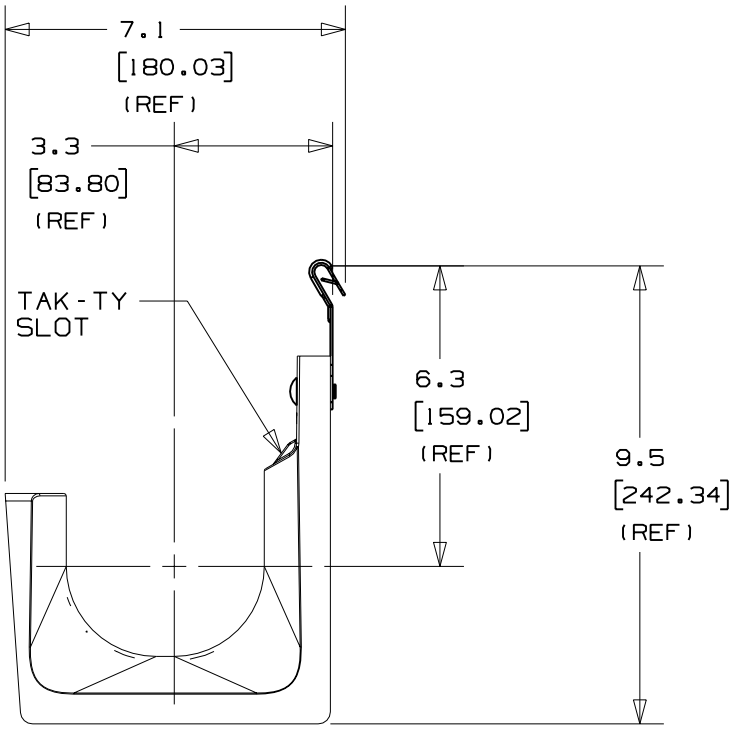

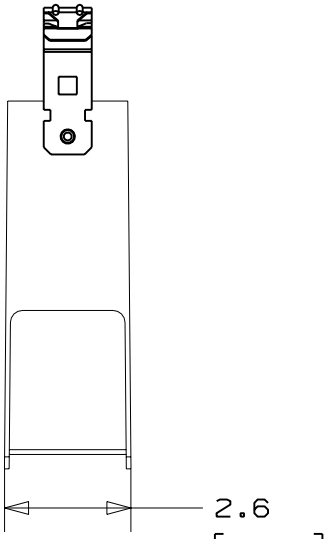

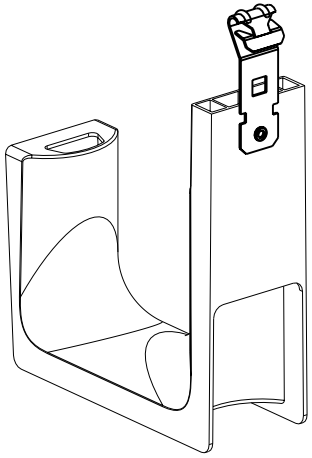

NOTES:
1. SEE CURRENT PRICE SHEET FOR PART NUMBER SUFFIX DESIGNATION FOR PACKAGE SIZE AND PRODUCT COLOR.
2. HOOK MATERIAL: 33% GLASS FILLED NYLON 6/6,
   CLIP MATERIAL: SPRING STEEL
   RIVET MATERIAL: ALUMINUM
3. PRODUCT IS DESIGNED TO SUPPORT A MAXIMUM OF 4.0" (101.6) DIAMETER BUNDLE. MAXIMUM RECOMMENDED STATIC LOAD: 100 lbs.
4. PRODUCT INCORPORATES FEATURES ALLOWING USER TO RETAIN CABLE BUNDLES IN J-PRO J-HOOK WITH TAK-TY CABLE TIES UP TO 3/4" WIDE.
5. PRODUCT MARKINGS:
   cULus logo and statement:
   "SUITABLE FOR USE IN AIR HANDLING SPACES IN ACCORDANCE WITH SECTION 300-22 (C) & (D) OF THE NATIONAL ELECTRIC CODE."
   ULC logo and statement:
   "IN ACCORDANCE WITH CAN/ULC S-102.2 IN SINGLE UNITS OR PAIRS, 4 ft (1220mm) MIN. SPACING, FSR=0, SDC=20."

DIMENSIONS IN BRACKETS ARE METRIC [mm]

CAD FILENAME/LAYERS: G03043DJ_PB_JP4ZP_00

PANDUIT CORP. TINLEY PARK, ILLINOIS

J-PRO J-HOOK WITH Z-PURLIN CLIP (JP4ZP-___)

UNLESS OTHERWISE SPECIFIED, DIMENSIONAL TOLERANCES ARE:
(.X) ±0.05 [1.3] (.XXX) ±0.010 [0.25]
(.XX) ±0.02 [0.5] ANGLES ± 5°

UNLESS OTHERWISE SPECIFIED, ALL DIMENSIONS ARE GIVEN IN INCHES, THIRD ANGLE PROJECTION.

REV	DATE	BY	CHK	DESCRIPTION	ECN	CUST	SUP
R	2/10/06	JAD		INITIAL RELEASE	GB3043DJ - R		

DRAWN BY: JAD
DATE: 2/10/06
CHK'D:
MAT'L: SEE NOTE 2
SCALE: NONE
DRAWING NO.: GB3043DJ
DWG SIZE: A